GBAFR-48 48" x 72" TEMPERED GLASS RECTANGULAR BACKBOARD

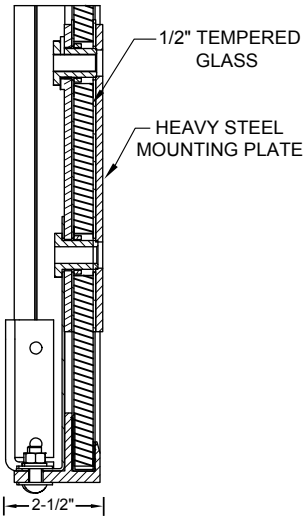

SECTION B-B

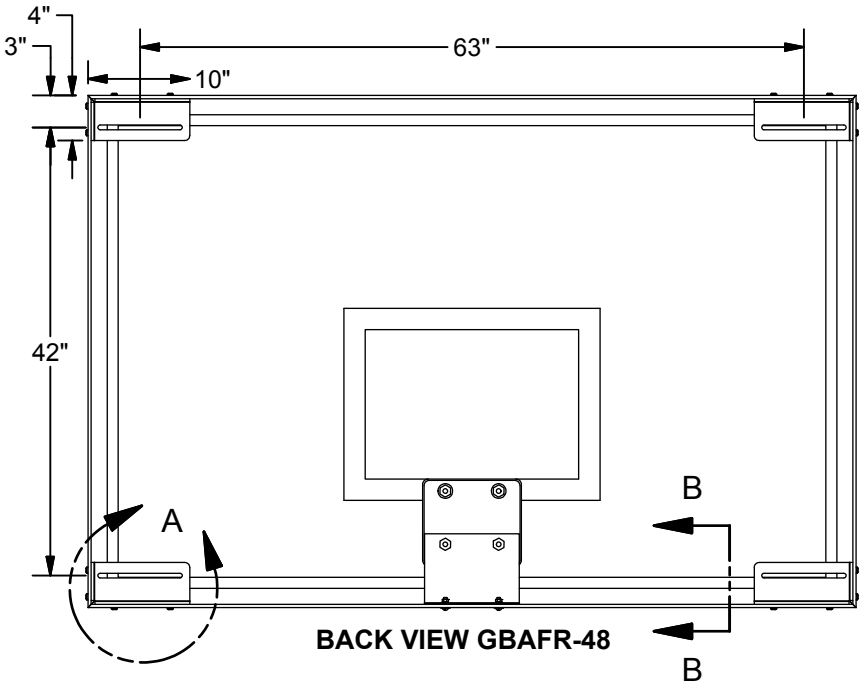

BACK VIEW GBAFR-48

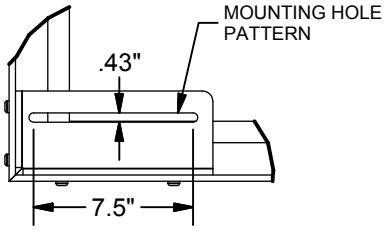

DETAIL A

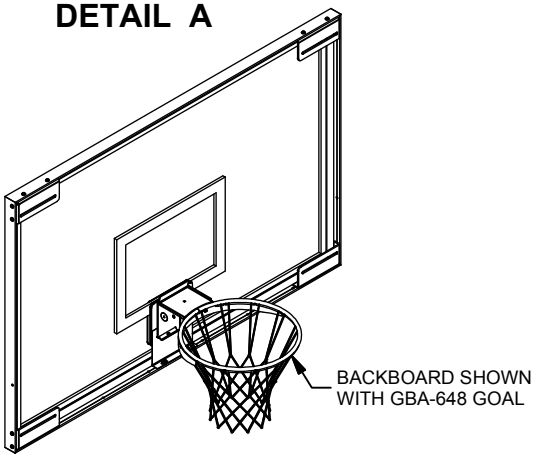

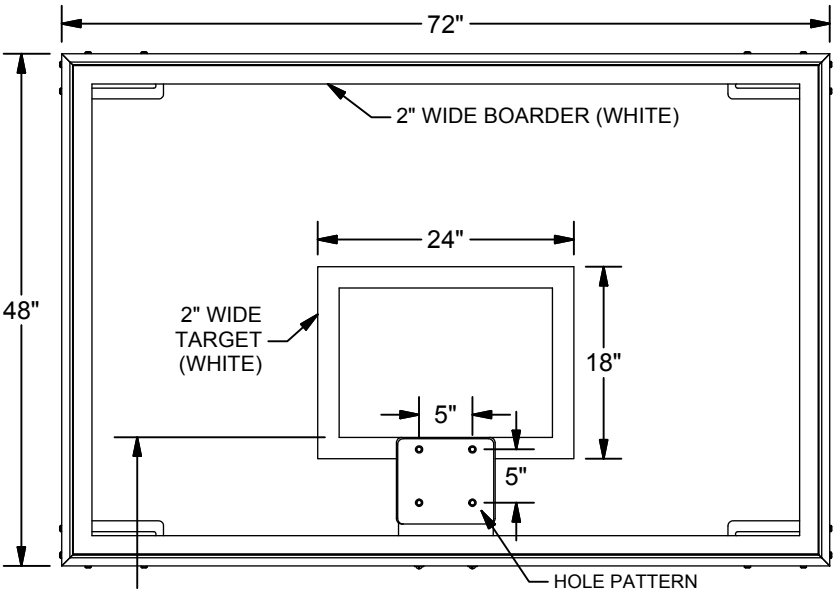

FRONT VIEW GBAFR-48

PROJECT NAME

PROJECT NUMBER

ARCHITECT

CONTRACTOR

NOTES

OPTIONAL EQUIPMENT:

GOAL: BREAKAWAY OR FIXED (SPECIFY) WITH FRONT MOUNT 5" x 5" HOLE PATTERN

EDGE PADDING: BOLT-ON (Safe-Pro™ MBBP-6) ADHESIVE (GBB-2)

jaypro sports®
INNOVATION, PERFORMANCE AND COMMITMENT SINCE 1953

GBAFR-48

48" x 72" TEMPERED GLASS RECTANGULAR BACKBOARD WITH REINFORCED ALUMINUM FRAME

© COPYRIGHT 2014 JAYPRO SPORTS, LLC. ALL RIGHTS RESERVED
THIS PRINT IS THE PROPERTY OF JAYPRO SPORTS, LLC. AND MAY NOT BE REPRODUCED WITHOUT WRITTEN PERMISSION

www.jaypro.com
(800) 243-0533
976 Hartford Turnpike
Waterford, CT 06385 USA

SPECIFICATION SHEET

BACKBOARD

Backboard shall be 48” x 72” to meet all NCAA, NFHSA, WNBA and NBA requirements. ½” tempered glass cushioned within a shock absorbing vinyl gasket. Constructed of high strength clear anodized aluminum channel outer frame. Designed to transfer impact load on goal directly to support structure, without imparting any stress on the glass when used with direct goal mount. May be used with either direct mount or four-corner-mounting applications. Standard mounting slots provided at 42” x 62”/66” on the rear corners of the board. Pre-drilled for Safe-Pro™ bolt-on edge padding. Official “white” border and target to be permanently fused into the face of the glass.

GOAL MOUNTING

Goal mounting pattern is 5” x 5”. Goal mounting plate is offset from glass to eliminate direct contact and eliminate stress. Added feature provides independent leveling of the goal.

WEIGHT

200 lbs.

WARRANTY

The GBAFR-48 Glass Backboard has a limited lifetime warranty when used with direct goal mount applications. This warranty warrants the end user against breaks and/or cracks in the Glass Backboard for the lifetime of the product, when subjected to normal use and conditions.

OPTIONS

Goals with a 5” x 5” mounting pattern, Edge Padding (MBBP-6, Safe-Pro™ Bolt-On Edge Padding or GBB-2, Glue-On Edge Padding)

www.jaypro.com / (800) 243-0533 / 976 Hartford Tpke, Waterford, CT 06385 USA
SUBJECT TO CHANGES IN DESIGN AND MANUFACTURING
© COPYRIGHT 2014 JAYPRO SPORTS, LLC. ALL RIGHTS RESERVED