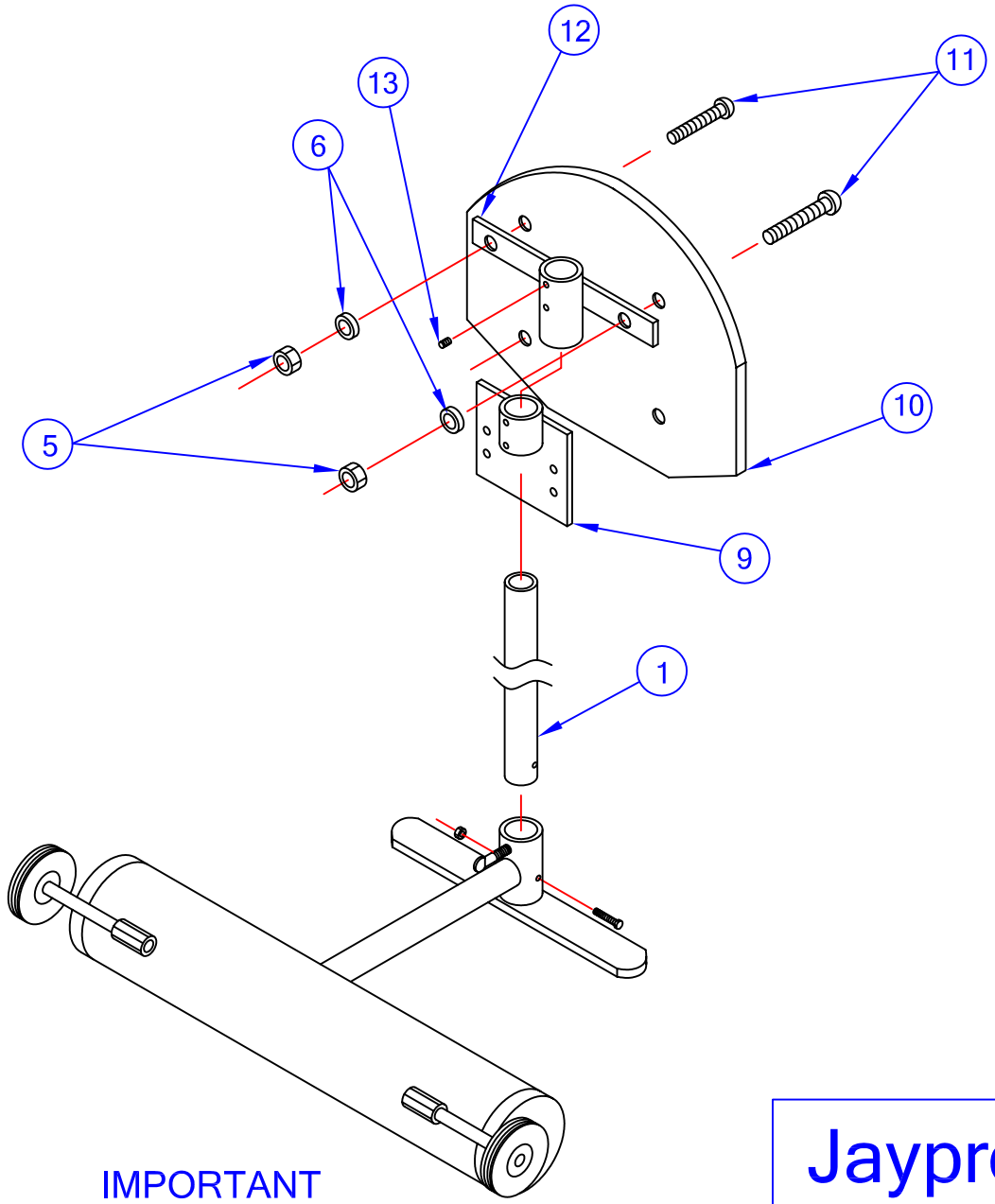

CAUTION

DO NOT HANG FROM GOAL
THIS IS DANGEROUS
AND MAY CAUSE THE UNIT
TO FALL OVER OR DAMAGE
THE EQUIPMENT

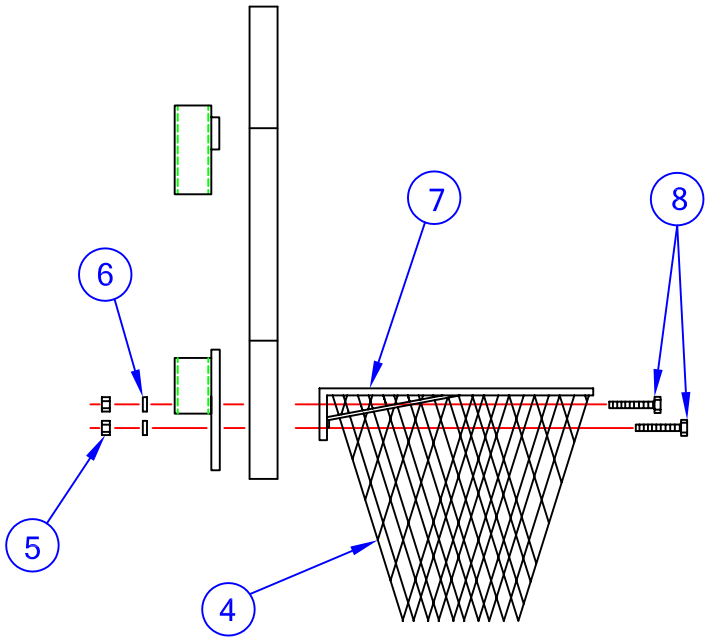

IMPORTANT

SEE SEPERATE ASSEMBLY
INSTRUCTIONS AND ILLUSTRATION
FOR MODEL "EZ-55" EASY PLAY
GAME STANDARD

Jaypro Sports
976 Hartford Turnpike
Waterford, CT 06385 USA
(800)243-0533
(800)988-3363 Fax
www.jaypro.com

MODEL NO.:
EZBB-8

PRODUCT NAME:
BASKETBALL ADAPTER

DRAWN BY: JAC

EFFECTIVE DATE:
4-8-03

JAYPRO SPORTS

EZ BASKETBALL ADAPTER, EZBB-8

LIST OF MATERIALS

PIECE NO.	PART NO.	DESCRIPTION	QTY.
1	MP501	UPRIGHT	1
2	EZ-55B	BASE ASSEMBLY (SEE SEPARATE INSTR.)	1
3	EC0042	END CAP	2
4	JNY-4HP	NET	1
5	HN261	LOCK NUT 5/16”-18	6
6	HW5020	FLAT WASHER 5/16”	6
7	G-35HP	GOAL	1
8	HS283	HEX HEAD BOLT 5/16”-18 x 3”	4
9	WB106	LOWER BACKBOARD FRAME	1
10	FSGB-1	BACKBOARD	1
11	HS4089	ROUND HEAD BOLT 5/16”-18 x 3”	2
12	WB107	UPPER BACKBOARD FRAME	1
13	HS882	SET SCREW SS 3/8”-16 x ½”	4

ASSEMBLY INSTRUCTIONS

1) SEE “EZ-55” FOR BASE ASSEMBLY DETAILS.

2) ASSEMBLE LOWER BACKBOARD FRAME (9) AND UPPER BACKBOARD FRAME (12) TO THE BACKBOARD (10) USING ROUND HEAD BOLTS 5/16”-18 x 3” (11), LOCK NUT 5/16”-18 (5), FLAT WASHER 5/16” (6)

3) ASSEMBLE GOAL (7) TO ASSEMBLED BACKBOARD USING HEX HEAD BOLTS 5/16”-18 x 3” (8), LOCK NUT 5/16”-18 (5), AND 5/16” FLAT WASHER (6). ASSEMBLE NET (4) TO GOAL.

4) ASSEMBLE COMPLETE BACKBOARD ONTO UPRIGHT AND FASTEN AT DESIRED HEIGHT USING SET SCREWS 3/8”-16 x ½” SS (13).

IMPORTANT

INTENDED FOR ELEMENTARY LEVEL PLAY ONLY. DO NOT “SLAM DUNK” OR HANG FROM THE GOAL. MAKE SURE ALL FASTENERS ARE INSTALLED AND SECURE BEFORE EVERY USE. UNIT TO BE MOVED ONLY BY TRAINED SUPERVISORY PERSONNEL.